Parts List				
ITEM	QTY	PART No.	DESCRIPTION	MATERIAL
1	1	PA0050	Flex Element Nitril 85/90 sh	NBR
5	1	PA0049	D-Handle SD	UNS J93404 Casted Super Duplex
2	1	BA8978	Ø43 SP Press Stab Body 20k Long-term	S32750 SUPER DUPLEX
4	1	BA2953	Nose for Ø43 Stab Long-term PEHD	PEHD 1000
3	1	BA1581	Lock Bolt For Flex Handle SD.	S32750 SUPER DUPLEX
6	2	104119	Ø43 Stab Seal RU15-PEEK	HNBR/PEEK

NOTE: 1
DESIGN CODE:
API 17H Type 1
API 6A (PSL 3)

NOTE: 2
TECHNICAL CLASSIFICATION:

Article Type:	001-Hot Stabs
Main Group:	1.03. Ø43 Hot Stab
Intermediate Group:	1.2.04. Pressure
Sub Group:	1.2.8.01. Single

NOTE: 3
INTERFACE INFORMATION:

Pressure Rating Bar:	1380
Design Water Depth:	3000m
Material:	Long-term
Weight in Air:	2,6 kg
Volume:	0,45 dm^3
Submerged Weight:	2,17 kg
Surface Area:	1012 cm^2
Hydraulic:	N/A
Mechanical:	N/A
Electrical:	N/A
Com. & Protocol:	N/A

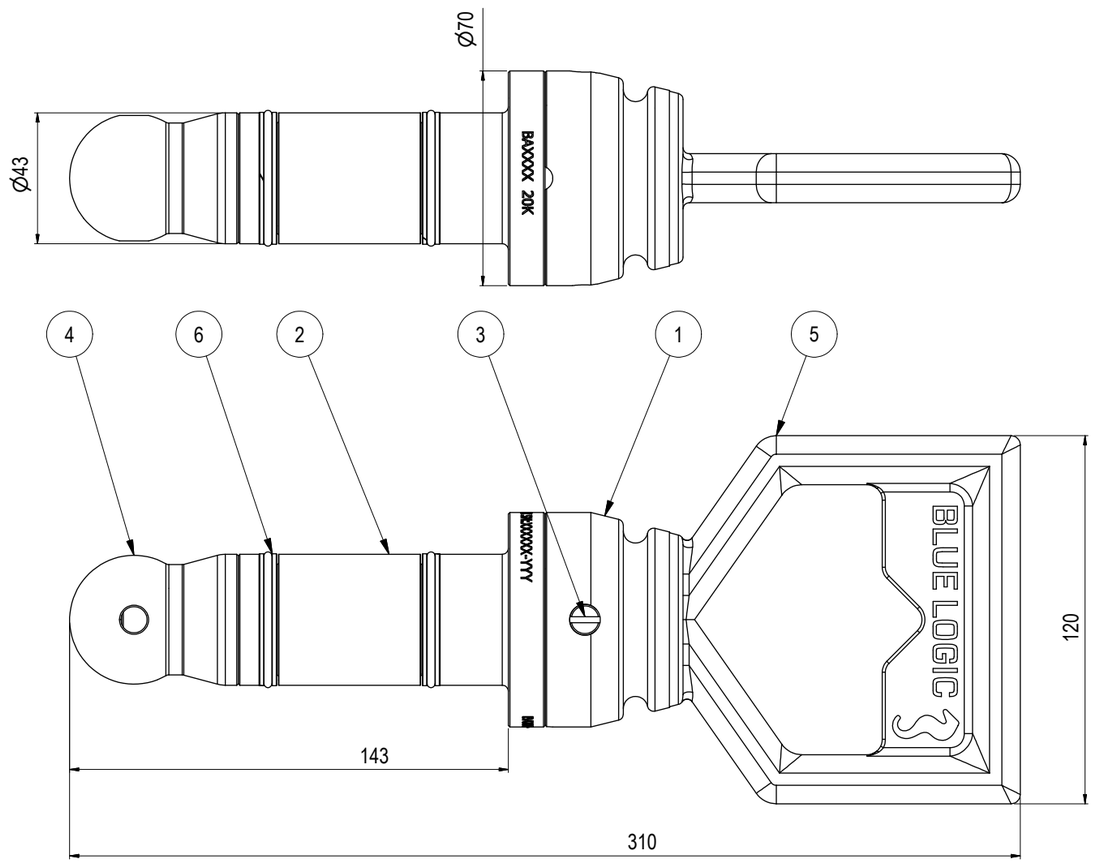

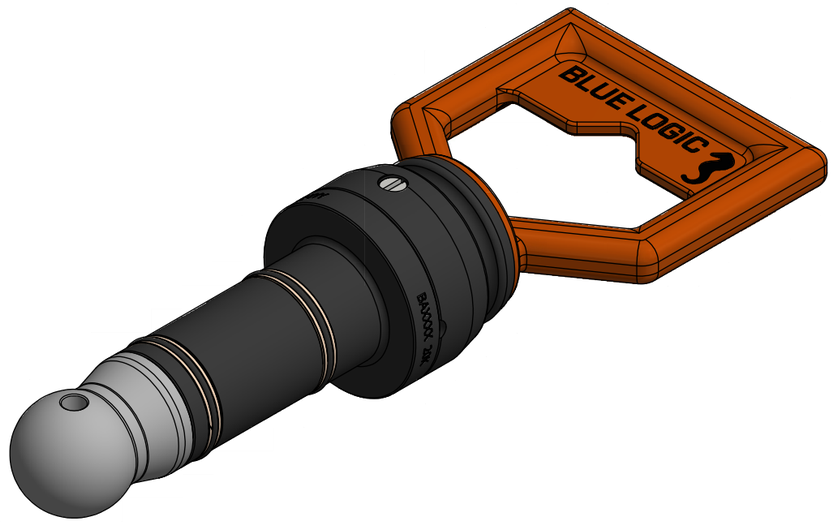

Rev.	Date	Reason for issue	Revision change	Made	Chk'd	Appr.
02	27.5.2021	9-IFU (Issued for Use)		HNJ	WTJ	HNJ
01	15.8.2016	2-IFT (Issued for Tender)		WTJ	LAE	N/A

BLUE LOGIC

This Drawing is the Property of Blue Logic AS © and must Not be Loaned, Reproduced or Transferred to others without written Permission

Dwg Scale: NTS
Dwg Proj:
Dwg Format: A3

Drawing title: Ø43 SP Press Stab 20k Long-term

Drawing number: BA8975

Rev. 02